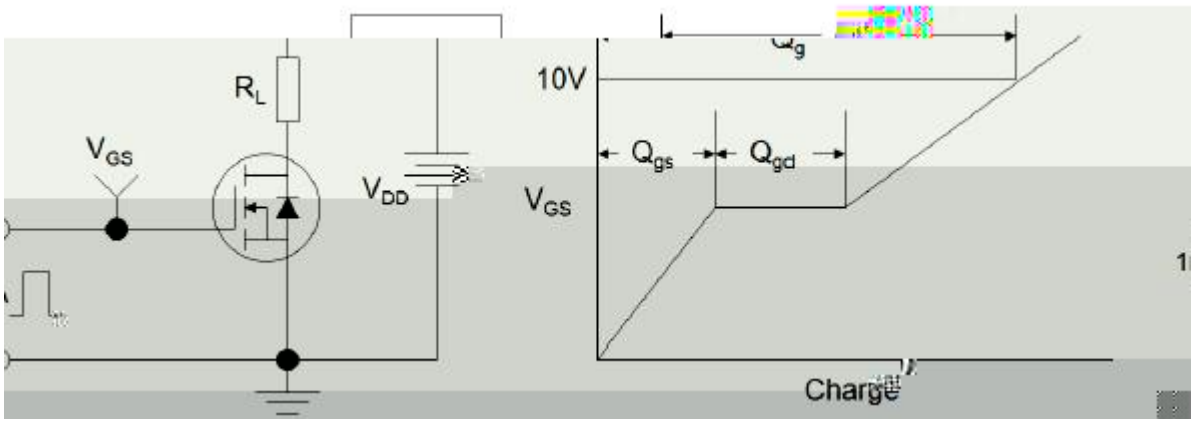
R_L
V_GS
V_DD
10V
Q_gs
Q_gd
V_GS
Charge

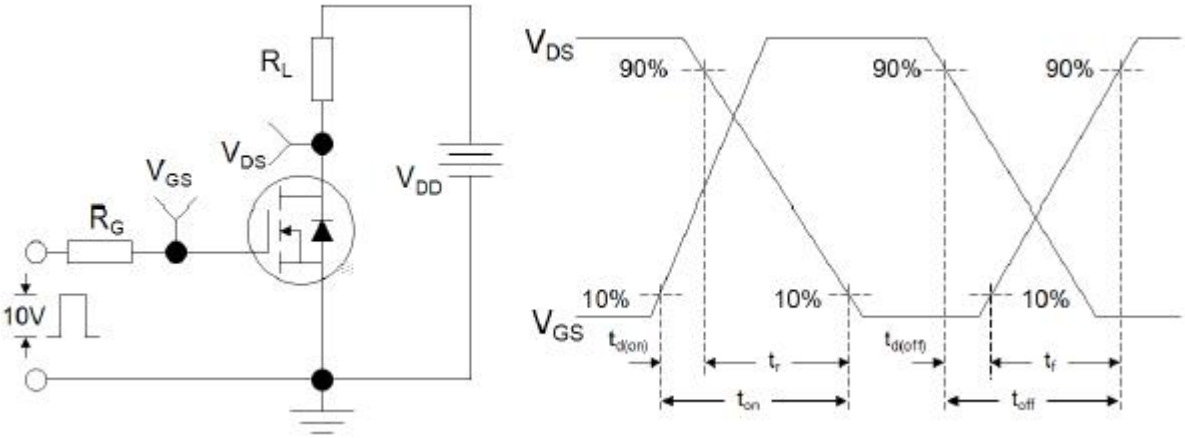
R_L
V_DS
V_GS
R_G
V_DD
10V
V_DS
90%
90%
90%
10%
10%
10%
V_GS
t_d(on)
t_r
t_d(off)
t_f
t_on
t_off

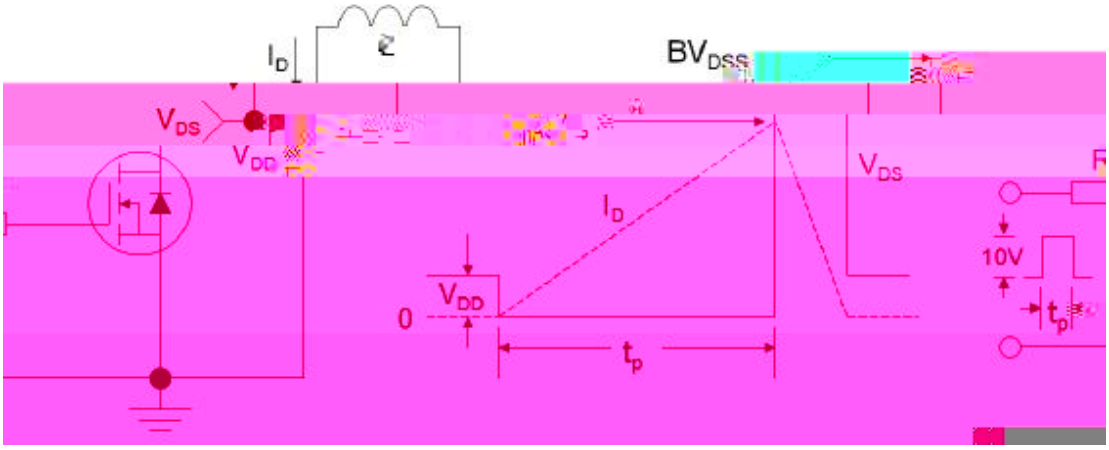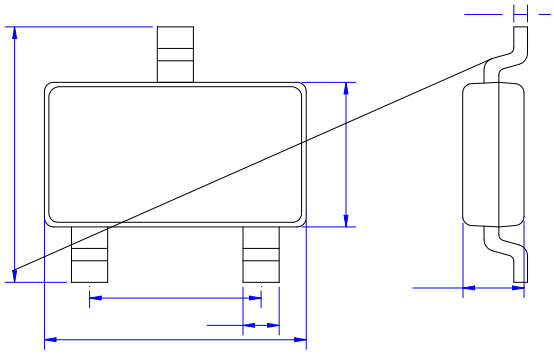
I_D
BV_DSS
V_DS
V_DD
V_DS
I_D
10V
V_DD
0
t_p
t_p